AC200161

Canopy extractor 200 series
52 cm, Stainless steel and glass
AC200161

- Energy saving low-noise fan
- Air extraction or air recirculation system
- Can be integrated invisibly in upper cabinetCan be integrated invisibly in upper cabinet

Energy-saving, low-noise fan
Rim extraction with flat and easy-to-clean glass cover
Dimmable, neutral white LED light for ideal illumination of the whole cooktop
Air extraction or recirculation system
Energy efficiency class A++

Output

Performance and noise level, output level 3/Intensive:
Air output according to EN 61591. Sound power level according to EN 60704-3.
Air extraction:
540 / 730m³/h.
64 / 70 dB (A) re 1 pW.
Air recirculation:
530 / 690m³/h.
72 / 77 dB (A) re 1 pW.

Features

Three electronically controlled power levels and an intensive mode.
Remote control is available as a special accessory.
Interval ventilation, 6 min.
Run-on function, 6 min
Grease filter saturation indicator.
Metal grease filter, dishwasher-safe.
Glass filter cover.
Neutral white LED light (4000 K), dimmable.
Lamp output 2 x 1W LED.
Illuminance: 244 lx
Fan technology with highly efficient, brushless DC motor.

Product rating

Energy efficiency class A++ at a range of energy efficiency classes from A+++ to D.
Energy consumption 29.6 kWh/year.
Ventilation efficiency class A.
Ilumination efficiency class A.
Grease filter efficiency class D.
Sound level min. 44 dB / max. 64 dB normal mode.

Planning notes

For air recirculation an external air recirculation module is required.
Patented air recirculation module with activated charcoal filter can be installed in the upper cabinet. The activated carbon filter can be changed from the front by simply pulling out the filter drawer.
The door of the upper cabinet must be fully open in order to change the activated charcoal filter.
Can be integrated invisibly in upper cabinet.
Vario cooktops with intensive production of vapours like VR/VP/VF should be placed in the middle beneath the cooker hood (in this case air recirculation is not recommended).
Clearance above gas appliances min. 65 cm(more than total load gas 12 kW min. 70 cm).
Clearance above electric appliances min. 50 cm.
When installing a ventilation hood with air extraction mode and a chimney-vented fireplace, the hood's power supply line needs to feature a suitable safety switch.

Connection

Total connected load 172 W.
Connecting cable 1.0 m with plug.

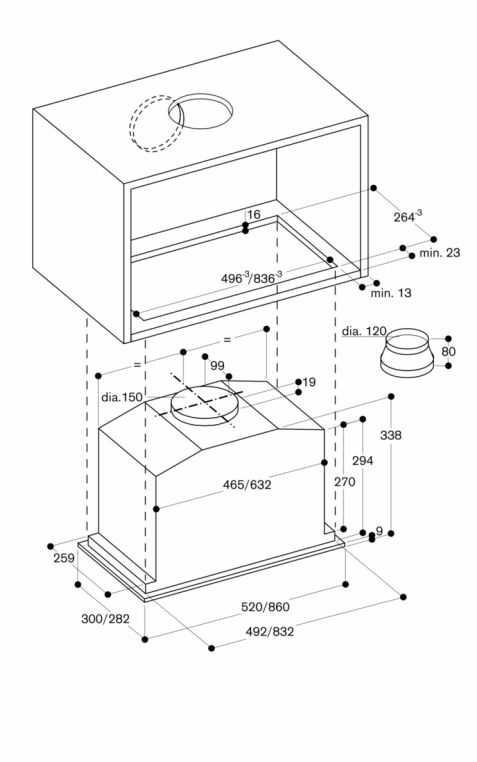

View of upper cabinet from above with AC 200 and AA 211 812

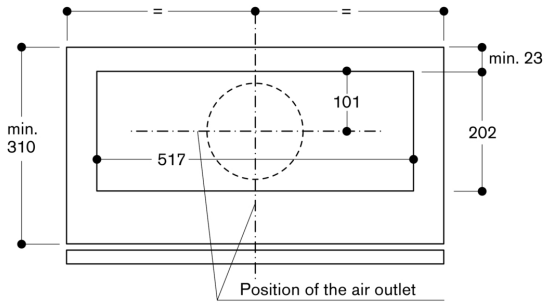
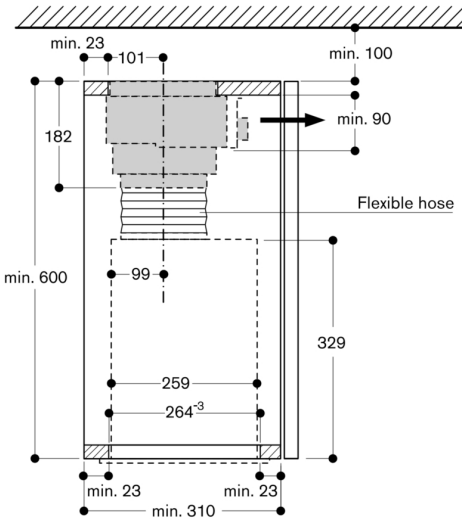
Cross-section of upper cabinet with AC 200 and AA 211 812