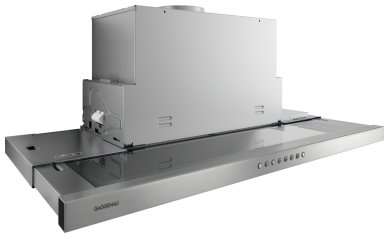

AF210192

Flat kitchen hood 200 series
90 cm, Stainless steel
AF210192

- Especially quiet operation thanks to integrated sound insulation
- Unobtrusive flat kitchen hood design thanks to integrated glass sheet in the steam screenUnobtrusive flat kitchen hood design thanks to integrated glass panel in the steam screen

Especially quiet operation thanks to integrated sound insulation
Steam screen extends by touching the handle bar
Especially high air output
Energy-saving, low-noise fan
Function for automatic, sensor-controlled power adjustment depending on the build-up of cooking vapours
Dimmable, neutral white LED light for ideal illumination of the whole cooktop
The patented lowering frame allows the flat kitchen hood to disappear completely into the upper cabinet
Air extraction or recirculation system
Recirculation module with activated charcoal filter: Silent and highly efficient air recirculation solution with odour reduction compareable to air extraction and long replacement intervals

Output

Performance and noise level, output level 3/Intensive:
Air output according to EN 61591.
Sound power level according to EN 60704-3.
Air extraction:
517 / 965m³/h.
57 / 71 dB (A) re 1 pW.
Air recirculation:
506 / 876m³/h.
62 / 69 dB (A) re 1 pW.

Features

Controls at front.
Three electronically controlled power levels and an intensive mode.
Automatic function with sensor-controlled run-on function.
Grease filter saturation indicator.
Stainless steel grease filter, dishwasher-safe.
Neutral white LED light (3500 K), continuously dimmable.
Lamp output 3 x 1.5 W.
Illuminance: 355 lx
Light can be switched on separately.
Fan technology with highly efficient, brushless DC motor.
Integrated sound insulation for quiet operation.
The fan is activated when the steam screen is extended.
Patented technology for extension of the steam screen.
Extendable steam screen 198 mm.
Airflow-optimised interior for efficient air circulation and ease of cleaning.
Patented easy mounting system for simple installation.
The package includes an one-way flap.

Product rating

Energy efficiency class A at a range of energy efficiency classes from A+++ to D.
Energy consumption 41.4 kWh/year.
Ventilation efficiency class A.
Illumination efficiency class A.
Grease filter efficiency class B.
Sound level min. 42 dB / max. 57 dB normal mode.

Planning notes

For air recirculation an external air recirculation module is required.
Patented air recirculation module with activated charcoal filter can be installed in the upper cabinet. The activated carbon filter can be changed from the front by simply pulling out the activated charcoal filter.
The door of the upper cabinet must be fully open in order to change the activated charcoal filter.
To be installed in an upper cabinet without base.
The required cavity depth of the upper cabinet together with the lowering frame measures 335 mm.
The required cavity height of the upper cabinet together with the lowering frame measures 600 mm.
Clearance above gas appliances min. 65 cm(more than total load gas 12 kW min. 70 cm).
Clearance above electric appliances min. 43 cm.
When installing a ventilation hood with air extraction mode and a chimney-vented fireplace, the hood's power supply line needs a suitable safety switch.

Connection

Total connected load 266 W.
Connecting cable 1.8 m, pluggable.

Cross-section of upper cabinet for AF210 with AA 211 812 and AA 210 492/460 lowering frame

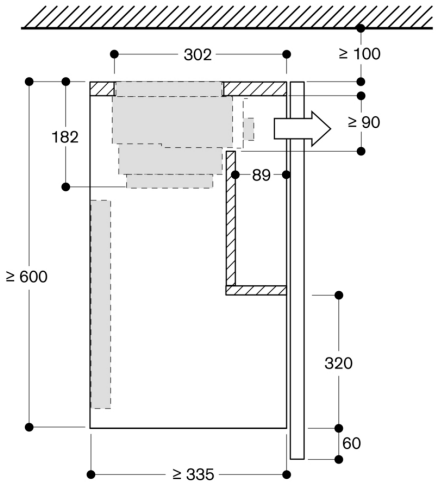

measurements in mm

Cross-section of upper cabinet for AF210 with AA 211 812

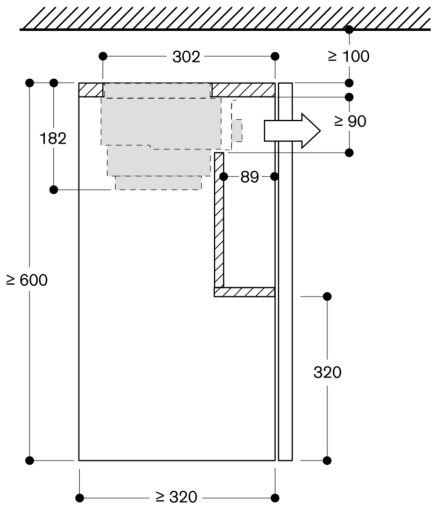

measurements in mm

View of upper cabinet from above with AA 211 812

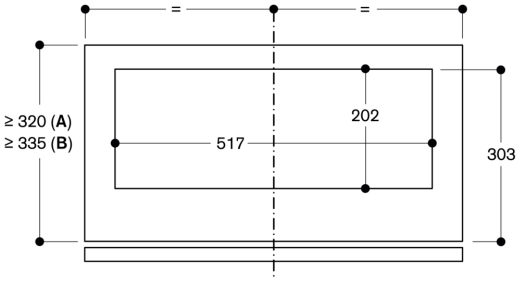

A: Appliance only
B: Appliance with lowering frame

measurements in mm

Upper cabinet for AF 210 with lowering frame

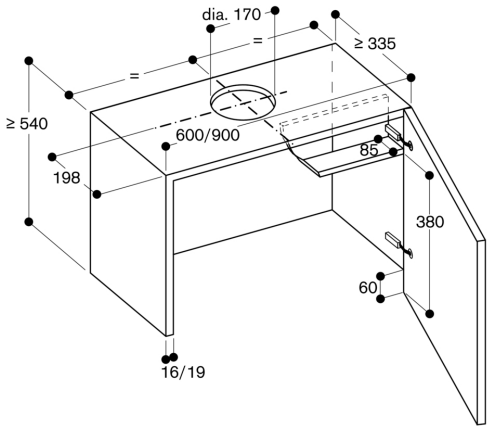

measurements in mm

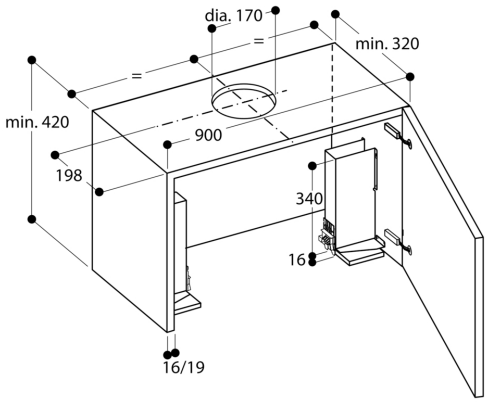

Upper cabinet for AF 210

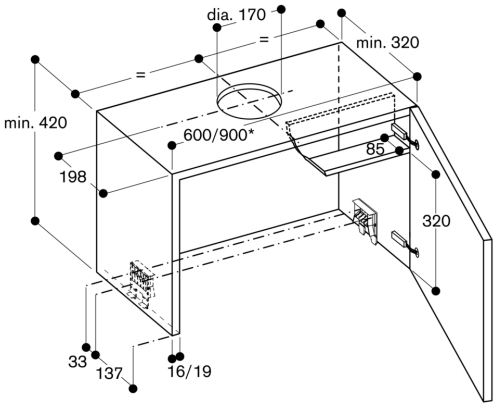

* for upper cabinets measuring 90 cm, the AA 210 491 installation set is required in addition

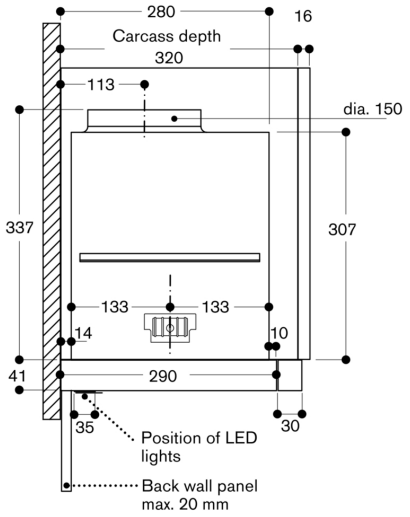
280
16
Carcass depth
320
113
dia. 150
337
307
133
133
14
10
41
290
35
30
Position of LED lights
Back wall panel max. 20 mm

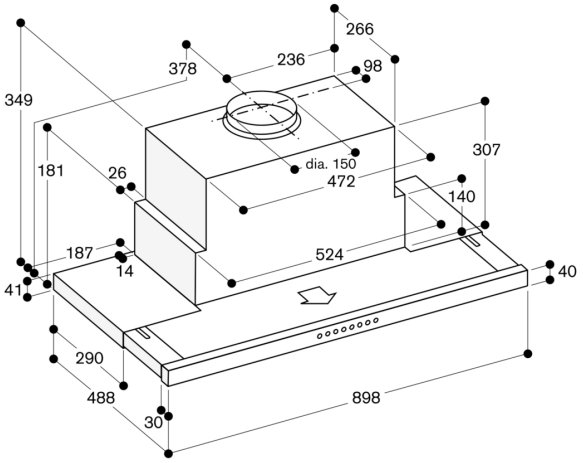
266
378
236
98
349
307
181
26
dia. 150
472
140
187
14
524
40
41
290
488
898
30