CG492211

Optional accessories

WP400001:
Wok pan

installation accessories

CA429410:
Built-in frames for CG492

Gas cooktop 400 series
100 cm, Natural gas 20 mbar
CG492211

- Full electronic power level regulation on 12 levels
- Precise and reproducible flame size
- Multi-ring burner with 6 KWFive multi-ring burners, up to 18 kW

Full electronic power level regulation on 12 levels
Precise and reproducible flame size
Automatic fast ignition, electronic flame monitoring with automatic re-ignition
Simmer function for cooking on a very low output level
Solid smooth-surface cast pan supports on the same level as the worktop
Solid stainless steel control knob

Cooking zones

1 multi-ring wok burner (300 W – 6000 W), suitable for pots up to max. ø 32 cm.
2 two-ring high output burners (165 W – 4000 W), suitable for pots up to max. ø 28 cm.
2 two-ring standard burners (165 W – 2000 W), suitable for pots up to max. ø 28 cm.

Handling

Control knobs with illuminated ring, cooking zone and output level markings.
One-handed operation.
Full electronic control in 12 output levels for exact power level adjustment plus simmer function.
Automatic fast ignition.

Features

Simmer function.
Three-part pan support with flat, continuous pot surface, on the same level as the worktop.
Brass burner rings.

Safety

Electronic flame monitoring with automatic re-ignition.
Residual heat indication.
Safety shut-off.

Planning notes

The frame set (necessary installation accessory)can be sent in advance to the manufacturer of the stainless steel or granite worktop for fitting.
Special nozzles can be ordered as spare parts.
Plan for an electrical connection (the appliance is not operable without power supply).
The horizontal positioning of the knobs may be aligned with the specific burners.
The drawing "Installation of the control knob" must be observed if the panel is more than 23 mm thick (there must be a recess at the rear).
Minimum worktop depth 70 cm.
Air intake from above.
No intermediate shelf required.
Due to the separate frame welded into the worktop, all parts remain fully accessible.
Rear panel and wall trims must be heat-resistant and consist of a non-flammable material.
The appliance can be fixed from above.
A minimum lateral clearance of at least 300 mm from adjacent heat-sensitive furniture or contact surfaces must be observed or thermal insulation fitted.
With a total connected load of more than 11 kW local regulations concerning room ventilation, room size and combination of extraction or recirculation hoods must be observed.
The minimum distance between the cooktop surface and a cabinet above, out of combustible material, needs to be 76 cm.
The minimum distance to a ventilation above is shown at the planning hints for the individual ventilation product.
The combination with VL 430/431 is not recommended, since the air extraction from the centre burner cannot be guaranteed due to the distance.
Appliance weight: approx. 35.

Connection

Total connected load gas 18.0 KW.
Total connected load electric 15.0 W.
Connecting cable 1.4 m with plug.

Longitudinal section

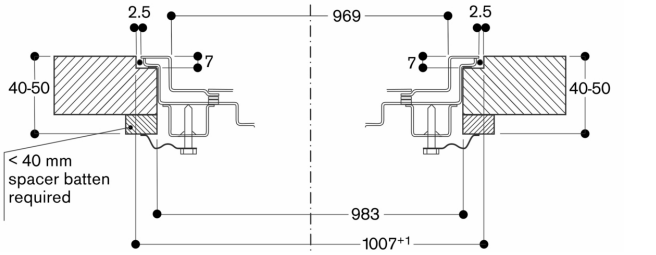

View from above

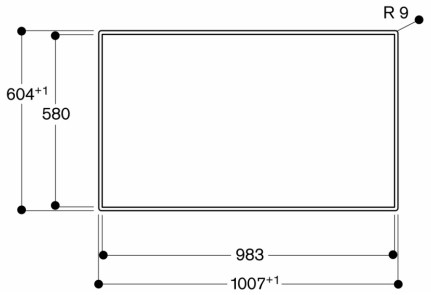

Cross-section

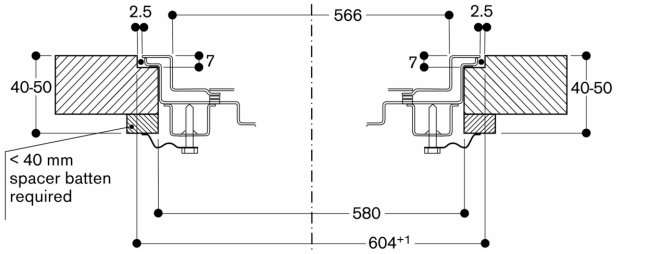

Installation of the control knob; flush installation

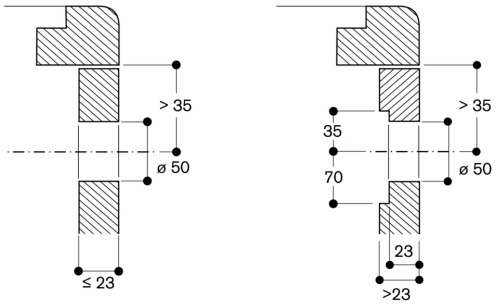

measurements in mm

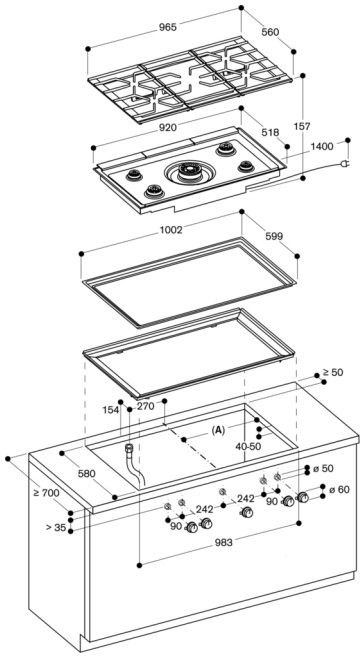

A: 491.5 mm

For further installation options, see the installation instructions

Measurements in mm