GM220100

Included accessories

1 x glass tray
1 x wire rack

installation accessories

GA601010:
Adjustable intermediate shelf 60cm

microwave oven Gaggenau Minimalistic series door hinge: right, Gaggenau Onyx
GM220100

Highlights
Flush installation
Handleless full glass door with electronic door opening.
Full touch display.
Single operation and combination of microwave and grill
Automatic programmes.
Net volume 21 litres.

Heating methods / Programmes
Microwave operation with 6 output levels: max. 900, 600, 450, 360, 180, 90 W.
Full surface grill with 3 levels of intensity, maximum output 1300 W.
Full surface grill with microwave output levels 360, 180 and 90 W combinable.
10 automatic programmes with weight indication:
3 defrosting programmes
4 cooking programmes
3 combination programmes
Option to save up to 10 favourites via Gaggenau Home Connect.

Handling
Side-opening door opens up to 95° angle.
Electronic door opening.
Touch display operation.
42 display languages available.
Info texts for additional information.

Features
Innowave (inverter technology) for uniform microwave output.
Timer functions: cooking time, cooking time end, count-up timer.
Soft interior lighting.

Selected digital services (Gaggenau Home Connect)
Remote control and monitoring.
Software updates.

Safety
Child lock to prevent accidental switch on or operation of the appliance.
Safety shut-off.
Thermally insulated door with double glazing.
Cooled housing with temperature protection.

Cleaning
Hygienic stainless steel interior with heat resistant glass base.
Cleaning aid programme.

Planning notes
Plan the niche without back wall.
Door hinge not reversible.
Minimum installation height 85 cm (top edge of niche bottom).
Height-adjustable feet.
Protrusion from appliance front to furniture cabinet 21 mm.
Installation above an oven with a standard furniture shelf or the intermediate shelf GA 601 010.
When planning a corner solution, pay attention to the side-opening door and the minimum required distance to the wall.

Connection
Total connected load 2.05 KW.
Connection cable 1.75 m, pluggable.

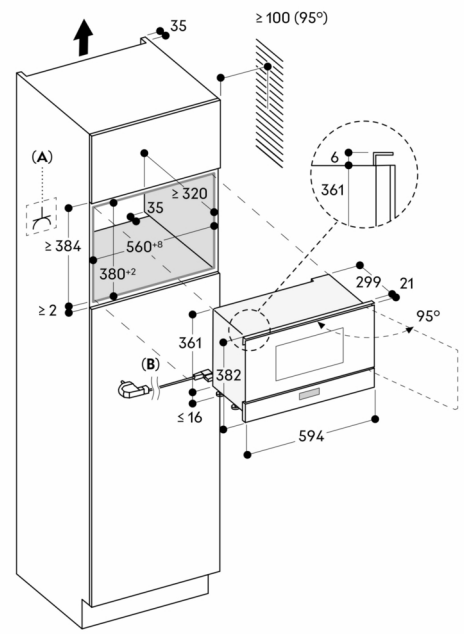

A: Accessible electrical connection
B : Cable with or without plug, depending on country

Measurements in mm

Installation in a wall-hanging cupboard

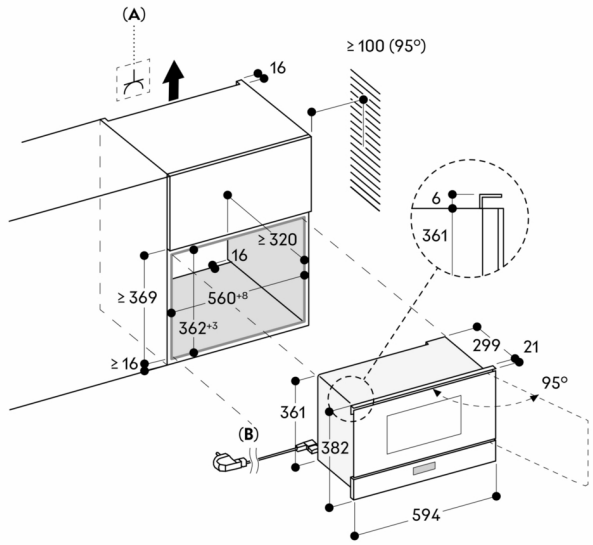

A: Accessible electrical connection
B : Cable with or without plug, depending on country

Measurements in mm