GS250100

A A+++ ↑ D

Included accessories

4 x cleaning cartridge
1 x wire rack
1 x cooking insert perforated
1 x cooking insert unperforated

Optional accessories

BA010051:
Core temperature probe

BA010301:
1 Triple pull-out rail for combi-steam

BA020361:
Container st. steel unperf

BA020370:
Container st.steel perf

BA046118:
Glass tray 60cm

CLS10040:
Cleaning cartridge, 4 pcs.

GN010330:
GN-adapter

GN114130:
GN insert unperf, st. steel, GN1/3, 40mm

GN114230:
GN insert unperf, st. steel, GN2/3, 40mm

GN124130:
GN insert perf, st. steel, GN1/3, 40mm

GN124230:
GN insert perf, st. steel, GN2/3, 40mm

GN340231:
Gastronorm roaster GN 2/3

installation accessories

GA601010:
Adjustable intermediate shelf 60cm

combi-steam oven Gaggenau Minimalistic series 60 x 45 cm, door hinge: right, Gaggenau Onyx
GS250100

Highlights

Flush installation
Handleless full glass door with electronic door opening.
Full touch display with stainless steel control ring.
Light and display response upon user detection.
Water tank for fresh and waste water
External steam generation
Automatic cleaning with perfect results, also for heavy soiling.
Hot air 30 °C to 230 °C can be combined with chosen humidity level of 0%, 30%, 60%, 80% or 100%
Sous-vide cooking with accurate temperature regulation
Full surface grill behind glass ceramic, combinable with circulated air up to 230 °C and steam
Automatic programmes and setting recommendations.
Net volume 50 litres.

Heating methods / Programmes

Hot air + 100 % humidity.
Hot air + 80 % humidity.
Hot air + 60 % humidity.
Hot air + 30 % humidity.
Hot air + 0 % humidity.
Grill + circulated air.
Grill level 1 + humidity.
Grill level 2 + humidity.
Sous-vide cooking.
Low temperature cooking.
Dough proving.
Keeping warm.
Defrosting.
Regenerating.
200 programmes (automatic programmes and setting recommendations).
Option to save up to 30 favourites.

Handling

Cushioned side-opening door with 110 ° opening angle.
Electronic door opening.
Full touch display with control ring.
42 display languages available.
User detection, adjustable distance.
Info texts for additional information.
Animated quick guides to assist appliance operation.

Features

Full surface grill 2 kW behind glass ceramic.
Hot air fan rotates in both directions for ideal heat distribution
2 removable 1.7 litre water tanks, dishwasher-safe.
Connection for core temperature probe (oven temperature probe usable).
Grill can be added briefly in hot air mode for additional browning.
Misting.
Water level warning.
Automatic boiling point detection.
Precise temperature control with display of the current temperature.
Timer functions: cooking time, cooking time end, count-up timer.
Long-term timer with pre-programmable heating cycles.
Programmable automatic door opening at cooking time end to avoid overcooking.
Optimum visibility of the food thanks to side lighting.
3 tray levels.

Selected digital services (Gaggenau Home Connect)

Remote control and monitoring.
Cooking time estimation when using the core temperature probe.
Door opening via voice assistant.

Safety

Child lock to prevent accidental switch on or operation of the appliance.
Electronic door lock to prevent unintentional opening of the appliance door.
Safety shut-off.
Thermally insulated door with triple glazing.
Cooled housing with temperature protection.

Cleaning

Hygienic stainless steel cooking interior.
Automatic cleaning. Automatic cleaning.
Automatic descaling for the steam generator.
Drying programme.
Automatic drying of the cavity at the end of the cooking process.
All removable parts and accessories dishwasher-safe, incl. water tank and stainer filter.

Planning notes

Plan the niche without back wall.
Door hinge not reversible.
No other electrical appliances should be installed above the GS.
Protrusion from appliance front to furniture cabinet 21 mm.
This appliance is intended for front flush installation.
No protruding front panel, horizontal handle, high cabinet top etc. should be fitted directly above the combi-steam oven to prevent damage to the furniture.
The edge of a worktop must be steam resistant as is required above a dishwasher.
When planning a corner solution, pay attention to the side-opening door and the minimum required distance to the wall.
Door opening angle appr. 110° (delivery status) can be reduced to appr. 92° if required.
The mains socket must be accessible and located outside the built-in niche.
Special accessories (order as spare part):
Part No. 17002490 Descaling tablets.

Connection

Energy efficiency class A at a range of energy efficiency classes from A+++ to D.
Total connected load 3.1 KW.
Connection cable 1.75 m, pluggable.

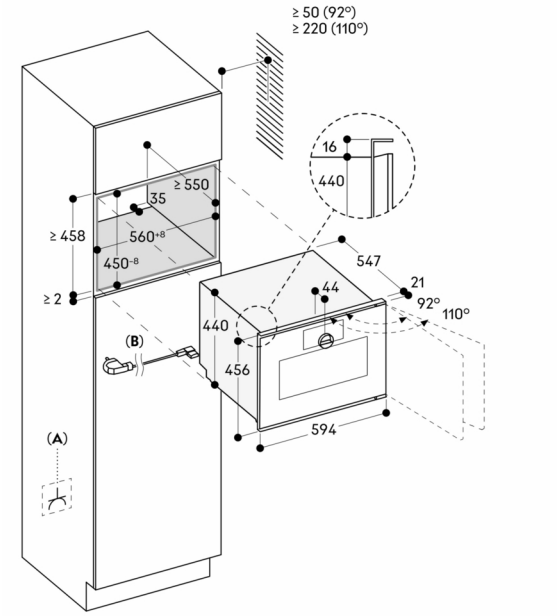

A: Accessible electrical connection
B : Cable with or without plug, depending on country

Measurements in mm