RVB497190

Optional accessories

RA430100:
Storage container with lid, anthracite

RA450012:
Water filter Vario 400

RVA438040:
Bottle support, oak wood, 1 pcs.

RVA450220:
Activated charcoal air filter, 2 pcs

installation accessories

RVA460000:
Installationskit side-by-side

RVA460020:
Backward compatibility kit SbS

RVA460900:
Replacement kit SbS, 91.4 cm/36"

RVA460910:
Replacement kit single unit, 91.4 cm/36"

RA425110:
Vario SS handle 1131 mm

RA425910:
Vario SS handle 810 mm

RA460030:
Frontpanel connection for RB

RVA421920:
SS door with handle, 90.0 cm for RVB497

RVA423141:
Side trims, 3 mm

RVA428920:
SS door w/o handle, 90.0 cm for RVB497

Fridge-freezer combination Vario cooling
Expressive series
213.4 x 90 cm
RVB497190

- Discover a dark brushed stainless steel interior that turns surfaces into statements.
- The light adapts to ambient conditions, display and drawer interactions, always presenting your finest food in the most captivating light.
- The spacious freezing compartment, including two interior drawers and an integrated ice maker, preserves your finest food, protecting it from freezer burn and oxidation.
- Allow every ingredient to stay its freshest with one chilled drawer and up to two fresh climate drawers offering both manual temperature, humidity settings and dedicated cooling programmes for specific food types.
- The intuitive display effortlessly guides you through a variety of capabilities, all while highlighting the specific compartment you've selected. Animations also facilitate any appliance maintenance tasks that might be needed.Dark brushed stainless steel interior, refined with solid anthracite aluminium elements

Warm white and glare-free LED light concept for optimal food presentation in all compartments
Opening assist for door enabling seamless integration without handles
Flat dark brushed stainless steel inner door
Flexible positioning of shelves and door racks through hidden rail system
Solid anthracite aluminium door racks
Professional freshness system with 2 fresh climate drawers and 1 chilled drawer
Integrated ice maker with fixed water connection
Spacious, fully extendable freezer compartment including 2 additional interior drawers
Full touch TFT display
Total volume 579 litres

Handling
Opening assist for door and drawer.
Cushioned door closing system.
User guidance through light and display response to drawer interaction.
Automatic brightness adjustment based on ambient illumination.
Easy accessible full touch TFT display.
Animated quick guides to assist appliance operation.

Features
Dynamic cold air distribution.
Automatic defrosting with defrost water evaporation.
Constant air purification by 2 activated charcoal air filters.
Rest mode certified by Star-K.
When rest mode is active, the appliance can only be opened using a handle.
Open-door and malfunction alarm.

Selected digital services (Gaggenau Home Connect)
Remote control and monitoring.
Software updates.
Storage management with cameras.
Automatic programme selection of fresh climate drawers (via object recognition).
Personalisation function for saving custom programmes.

Cooling
Professional freshness system.
No-frost technology with fast cooling.
Temperature adjustable from +2 °C to +8 °C.
3 aluminium-framed safety glass shelves, individually adjustable in height.
1 integrated safety glass shelf.
Optimal food presentation with warm white and glare-free, hidden LED light bars (3000 K).
Flexible positioning of door racks through hidden rail system.
3 door racks, thereof 2 height adjustable.
Total volume of all refrigerator compartments: 382 litres.

Fresh climate drawer
2 fresh climate drawers with humidity control.
Temperature adjustable from -1 °C to +2 °C.
Ideal storage conditions for different foods through dedicated programmes (e.g. Fruit, Vegetables, Meat).
Individual adjustment of temperature and humidity.
Extended food preservation with ethylene absorber.
Indirect illumination, transparent front.
Fully extendable, with cushioned closing system.

Chilled drawer
Temperature dependent on cooling compartment (always 2K to 3K lower).
Indirect illumination, transparent front.
Fully extendable, with cushioned closing system.

Freezing
No-frost technology with fast freezing at -30 °C.
4-star freezer compartment.
Temperature adjustable from -16 °C to -24 °C.
Freezer burn protection.
Oxidation protection.
Freezing capacity 14 kg /24 h.
Storage time after a malfunction 19 h.
Spacious, fully extendable freezer compartment with synchronously running pull-out rails.
2 extendable interior drawers.
Warm-white, glare-free LED lighting (3000 K) within freezer compartment.
Volume 197 litres.

Ice maker
Integrated in the freezer compartment, with fixed inlet water connection.
Can be switched off.
Particle filter for water inlet, integrated in ventilation grille area.
Saturation indicator for filter via full touch TFT display
Ice cube production: approx. 3 kg /24 h.
Removable ice storage container with approx. 3 kg capacity.
Integrated, easy accessible ice cube scoop.

Product rating
Energy efficiency class D at a range of energy efficiency classes from A to G.
Energy consumption 280 kWh/year.

Noise level 39 dB (A) re 1 pW.

Planning notes
Flat hinge.
Door hinge right, reversible.
Door opening angle of 115°, fixable at 90°.
Max. door panel weight:
Door: 50 kg.
Drawer: 14 kg.
Shut-off valve for water connection must be planned next to the appliance and always be accessible.
If the water pressure exceeds 0.8 MPa (8 bar), connect pressure relief valve between water tap and hose set.

Connection
Total connected load 0.200 KW.
Connecting cable 3.0 m, pluggable.
Water inlet.
Supply hose 1.8 m with 3/4" connection.
Water pressure 2 bar to 8 bar.

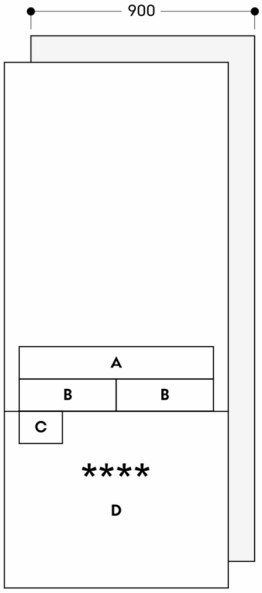

A: Chilled drawer
B: Fresh climate drawer
C: Ice maker
D: Drawer

Measurements in mm

Niche width 900 mm

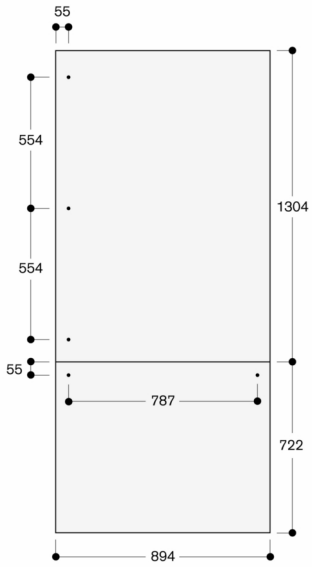

The door panel thickness is 19 mm

The maximum door panel dimensions are based on a clearance of 3 mm, based on a single niche

Measurements in mm

Niche width 900 mm

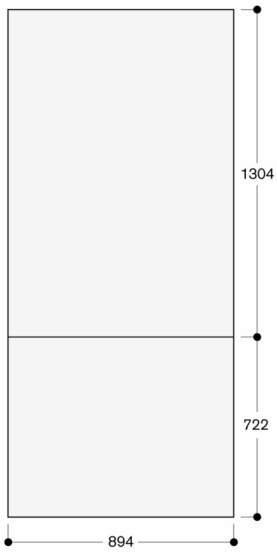

The door panel thickness is 19 mm

The maximum door panel dimensions are based on a clearance of 3 mm, based on a single niche

Measurements in mm

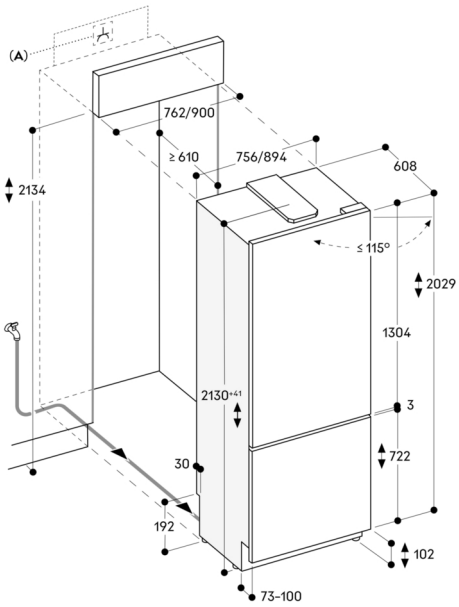

A: Electrical connection

The maximum door panel dimensions are based on a clearance of 3 mm

The height of the plinth can be reduced to 50 mm

Measurements in mm

Replacement of side-by-side installation incl. RVY 497 / RVB 497 / RVC 497 / RVF 497

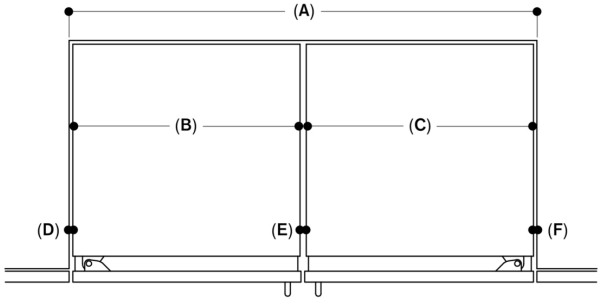

A: Niche width	1828	≤ 1676
B: Appliance 1 width	894	894
C: Appliance 2 width	894	≤ 756
D: Left gap	10	10
E: Center gap	20	13
F: Right gap	10	3

Measurements in mm

Replacement of side-by-side installation with Vario cooling 400 series

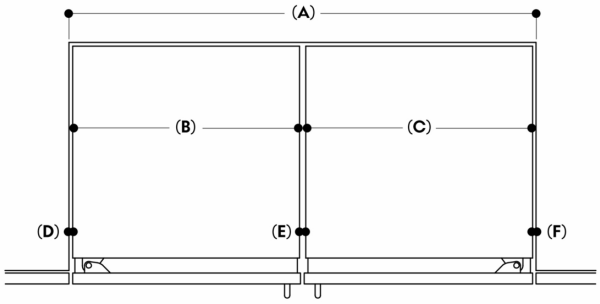

A: Niche width	1828	≤ 1676
B: Vario cooling Expressive appliance width	894	≤ 756
C: Vario cooling 400 appliance width	≤ 908	≤ 908
D: Left gap	10	3
E: Center gap	13	6
F: Right gap	3	3

Measurements in mm

Replacement of RVB 497 / RVC 497 / RVF 497 into 914 mm niche

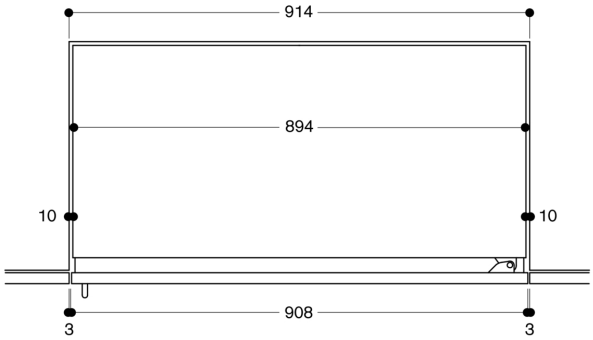

The resulting lateral gaps of 10 mm can be covered with side trims included in the installation accessory RVA 460 910

Measurements in mm

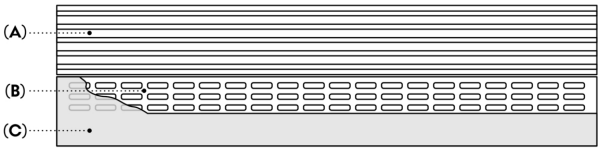

A: Air inlets and exhaust air outlets
B: Ventilation openings in skirting board area
C: Skirting board

The height of the plinth can be reduced to 2" (50 mm) based on the standard installation height
The skirting board height needs to be reduced to match the plinth height to allow for the additional ventilation

Plinth area

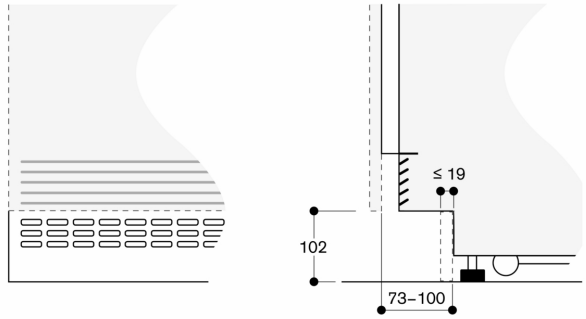

Based on the standard installation height, the height of the plinth is 102 mm

The height of the plinth can be reduced to 50 mm

Maximum skirting board thickness 19 mm

Measurements in mm

Wall clearance fridge-freezer combination

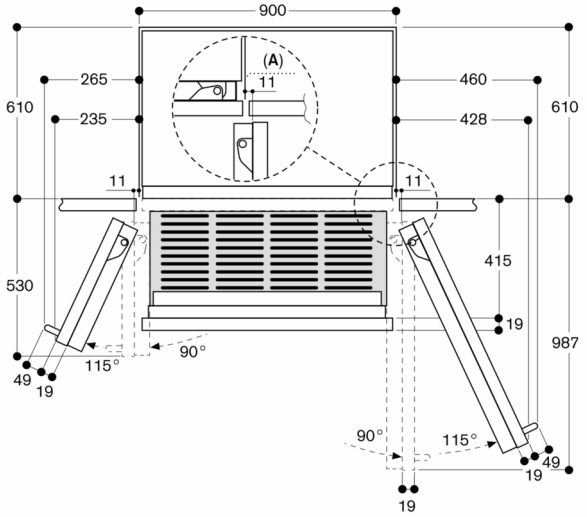

A: Recess

The clearances are based on a door panel thickness of 19 mm and a Gaggenau handle with a height of 49 mm

Measurements in mm

Installation niche for an individual appliance

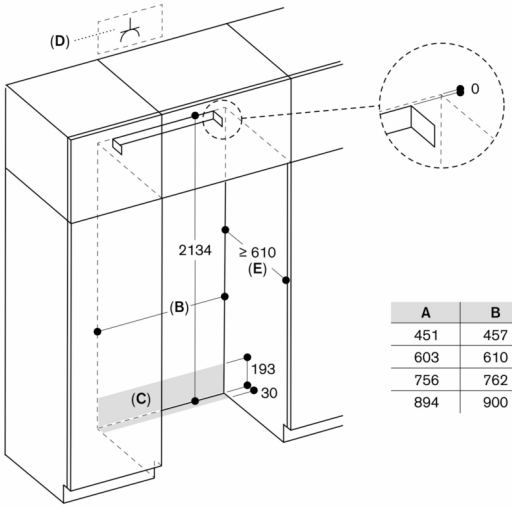

A	B
451	457
603	610
756	762
894	900

A: Appliance width
B: Width of installation niche
C: Area for guiding water supply hose
D: Socket
E: Depth of installation niche, depending on kitchen design

Measurements in mm

Wall clearance RVB / RVC / RVF / RVW

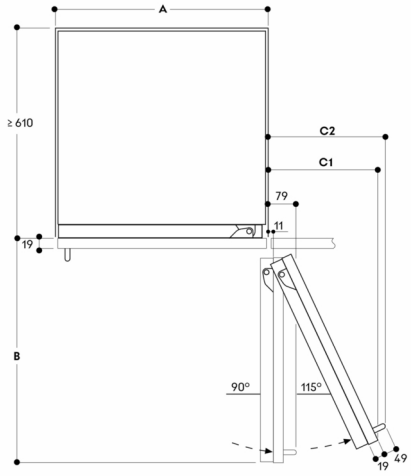

Niche width

A	B	C1	C2
457	525	235	265
610	677	299	330
762	830	364	395
900	970	420	442

The drawing is based on a door panel thickness of 19 mm as well as the height of a Gaggenau handle of 49 mm

Measurements in mm

Door opening angle

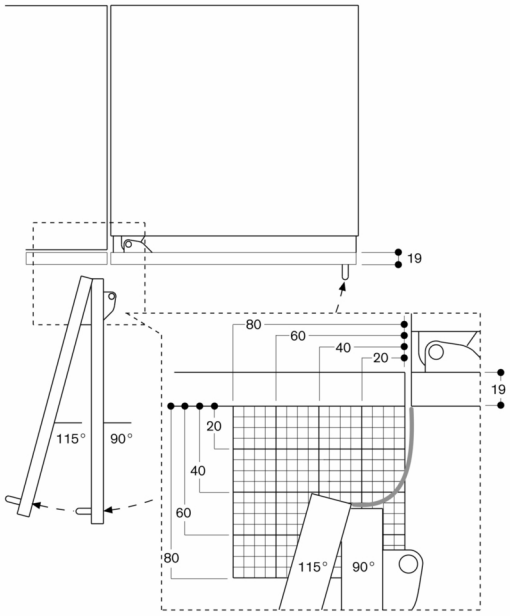

The hinge travel and resulting clearances from adjacent furniture units and handles can be found from the drawing while allowing for the thickness of the front panel. In the drawing, a furniture unit front panel thickness of 19 mm was assumed.