RVC497190

D A↑G

Included accessories

1 x egg box with lid
2 x wooden bottle holder magnetic
1 x Ethylene absorber

Optional accessories

RA430100:
Storage container with lid, anthracite

RVA438040:
Bottle support, oak wood, 1 pcs.

RVA450220:
Activated charcoal air filter, 2 pcs

installation accessories

RA425110:
Vario SS handle 1131 mm

RA460020:
Frontpanel connection long

RVA421924:
SS door with handle 90 cm (35.5")

RVA423141:
Side trims, 3 mm

RVA428924:
SS door w/o handle 90 cm (35.5")

RVA460000:
Installationskit side-by-side

RVA460020:
Backward compatibility kit SbS

RVA460900:
Replacement kit SbS, 91.4 cm/36"

RVA460910:
Replacement kit single unit, 91.4 cm/36"

RVA466900:
Door direction change kit 90cm (35.5")

refrigerator Vario cooling Expressive series
213.4 x 90 cm
RVC497190

Highlights

Dark brushed stainless steel interior, refined with solid anthracite aluminium elements
Warm white and glare-free LED light concept for optimal food presentation in all compartments
Opening assist for door with two options:
1. Push-to-open function for integration into handleless furniture front
2. Pull-to-open function to facilitate opening the door using a handle
The drawers in the RVC and RVF models are positioned at the same height. With side-by-side installation, the safety glass shelves and door racks can be aligned on the same level.
Flexible positioning of shelves and door racks through hidden rail system
Flat dark brushed stainless steel inner door
Professional freshness system with 2 fresh climate drawers and 1 chilled drawer
Full touch TFT display
Total volume 622 litres

Handling

Opening assist for door.
Cushioned door closing system.
User guidance through light and display response to drawer interaction.
Automatic brightness adjustment based on ambient illumination.
Easy accessible full touch TFT display.
Animated quick guides to assist appliance maintenance.

Features

Dynamic cold air distribution.
Automatic defrosting with defrost water evaporation.
Constant air purification by 2 activated charcoal air filters.
Rest mode certified by Star-K.
When rest mode is active, the appliance can only be opened using a handle.
Open-door and malfunction alarm.

Selected digital services (Gaggenau Home Connect)

Remote control and monitoring.
Software updates.
Personalisation function for saving custom programmes.

Cooling

Professional freshness system.
No-frost technology with fast cooling.
Temperature adjustable from +2 °C to +8 °C.
3 aluminium-framed safety glass shelves, individually adjustable in height.
1 integrated safety glass shelf.
Optimal food presentation with warm white and glare-free, hidden LED light bars (3000 K).
Flexible positioning of door racks through hidden rail system.
3 height adjustable door racks, 1 of which is extra deep.

Fresh climate drawer

1 fresh climate drawer with temperature adjustable from -1 °C to +2 °C.
1 fresh climate drawer with temperature adjustable from -1 °C to +8 °C.
Ideal storage conditions for different foods through dedicated programmes (e.g. Fruit, Vegetables, Meat and Cold sensitive food).
Individual adjustment of temperature and humidity.
Extended food preservation with ethylene absorber.
Indirect illumination, transparent front.
Fully extendable, with cushioned closing system.

Chilled drawer

Temperature dependent on cooling compartment (always 2K to 3K lower).
Indirect illumination, transparent front.
Fully extendable, with cushioned closing system.

Product rating

Energy efficiency class D at a range of energy efficiency classes from A to G.
Energy consumption 159 kWh/year.
Noise level 38 dB (A) re 1 pW.

Planning notes

Flat hinge.
Door hinge right, reversible, with accessory.
Door opening angle of 115°, fixable at 90°.
Max. door panel weight 40 kg.

Connection

Total connected load 0.300 KW.
Connecting cable 3.0 m, pluggable.

Replacement of side-by-side installation incl. RVY 497 / RVB 497 / RVC 497 / RVF 497

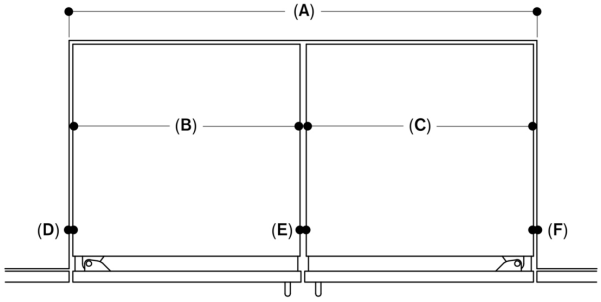

A: Niche width	1828	≤ 1676
B: Appliance 1 width	894	894
C: Appliance 2 width	894	≤ 756
D: Left gap	10	10
E: Center gap	20	13
F: Right gap	10	3

Measurements in mm

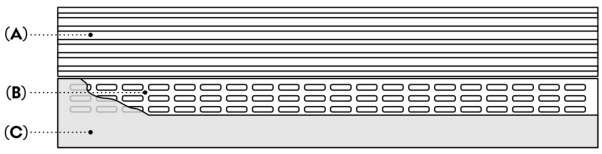

A: Air inlets and exhaust air outlets
B: Ventilation openings in skirting board area
C: Skirting board

The height of the plinth can be reduced to 2″ (50 mm) based on the standard installation height
The skirting board height needs to be reduced to match the plinth height to allow for the additional ventilation

Plinth area

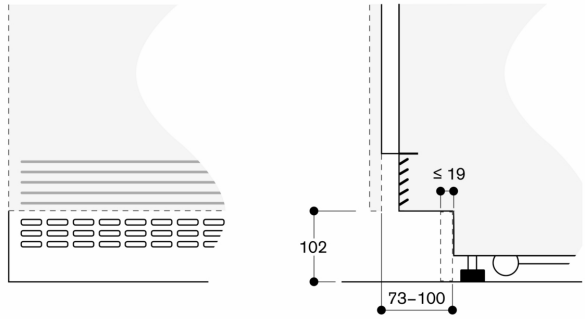

Based on the standard installation height, the height of the plinth is 102 mm

The height of the plinth can be reduced to 50 mm

Maximum skirting board thickness 19 mm

Measurements in mm

Installation niche for an individual appliance

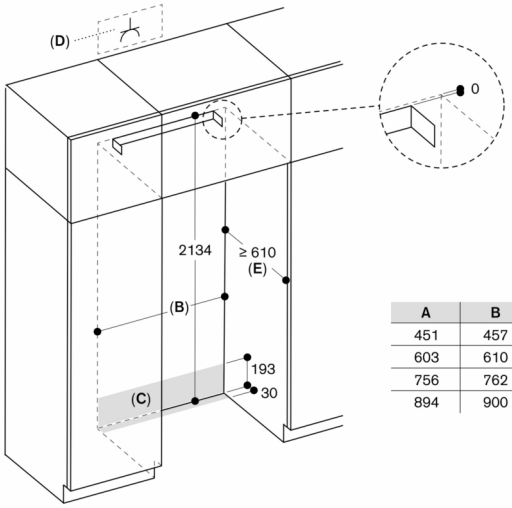

A	B
451	457
603	610
756	762
894	900

A: Appliance width
B: Width of installation niche
C: Area for guiding water supply hose
D: Socket
E: Depth of installation niche, depending on kitchen design

Measurements in mm

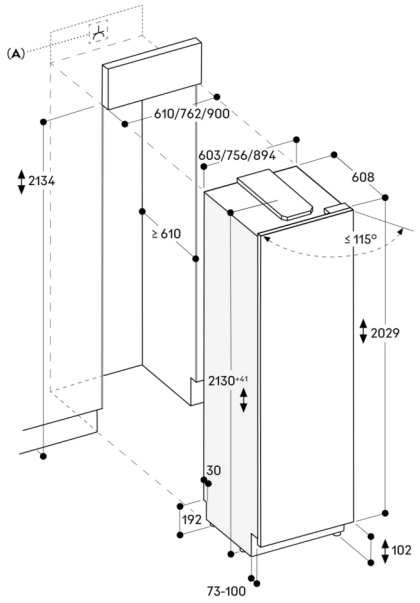

A: Electrical connection

Maximum door panel dimensions are based on a clearance of 3 mm

The height of the plinth can be reduced to 50 mm

Measurements in mm

Niche width 900 mm

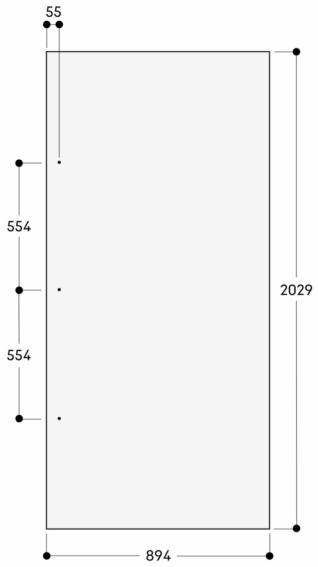

The door panel thickness is 19 mm
The maximum door panel dimensions are based on a clearance of 3 mm, based on a single niche

Measurements in mm

Niche width 900 mm

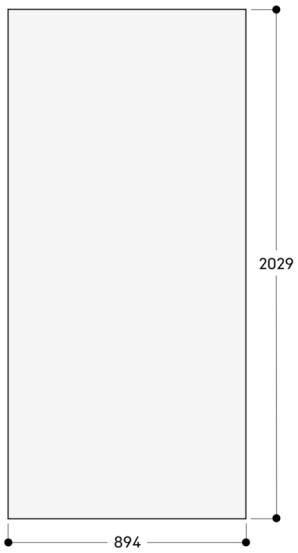

The door panel thickness is 19 mm
The maximum door panel dimensions are based on a clearance of 3 mm, based on a single niche

Measurements in mm

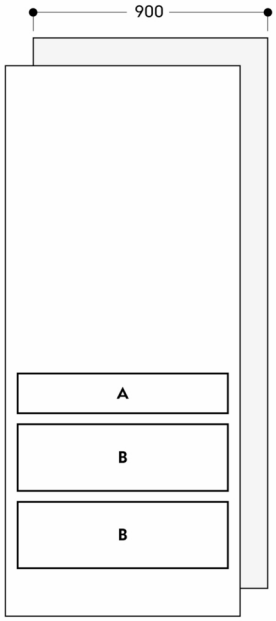

A: Chilled drawer
B : Fresh climate drawer

Measurements in mm

Wall clearance RVB / RVC / RVF / RVW

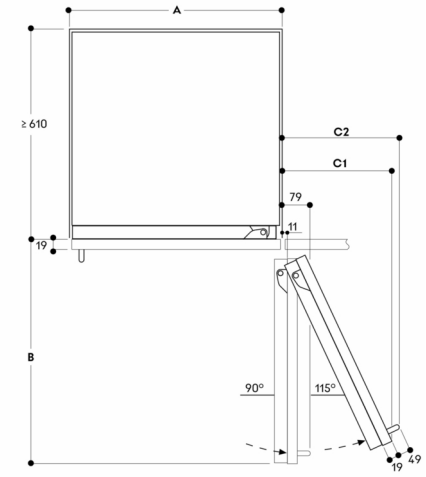

Niche width

A	B	C1	C2
457	525	235	265
610	677	299	330
762	830	364	395
900	970	420	442

The drawing is based on a door panel thickness of 19 mm as well as the height of a Gaggenau handle of 49 mm

Measurements in mm

Door opening angle

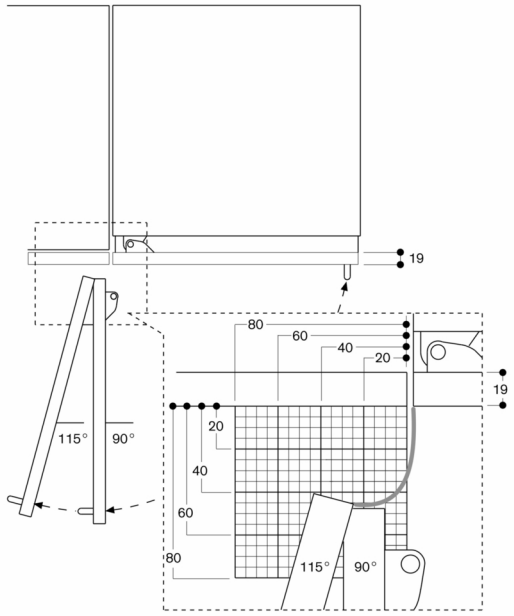

The hinge travel and resulting clearances from adjacent furniture units and handles can be found from the drawing while allowing for the thickness of the front panel. In the drawing, a furniture unit front panel thickness of 19 mm was assumed.