RY295350

Optional accessories

RA450012:
Water filter Vario 400

Multi Door American Fridge Freezer 200 series
183 x 90.5 cm, Brushed black steel anti-fingerprint
RY295350

3 climate zones incl. fresh cooling 0 °C
2 fresh cooling drawer 0 °C with 5 preset temperature settings between -2 °C and +4 °C
3 symmetrically split glass shelves, height adjustable
Integrated ice maker with fixed inlet water connection
Internal water dispenser for chilled water
5 preset brightness settings for the lighting
Total volume 573 litres

Handling
Electronic temperature control with temperature display.
Touch keys.

Features
Dynamic cold air distribution.
Automatic defrosting with defrost water evaporation.
Open-door and malfunction alarm.
Child lock.
Rest mode certified by Star-K.
Holiday mode.
Dark anthracite coloured top and side panels outside.
Activated charcoal filter for water filter system with saturation indicator shown in display.
Activated charcoal air filter.

Selected digital services (Gaggenau Home Connect)
Remote control and monitoring.
Integrated WiFi module for digital services (Home Connect).
The availability of the Home Connect functionality depends on the availability of the Home Connect Services in your country. Home Connect Services are not available in every country – for further information please check: www.home-connect.com

Cooling
Fast cooling.
Temperature adjustable from +2 °C to +8 °C.
3 split safety glass shelves, all 6 half shelves with manual height adjustment.
1 integrated shelf.
2 large door racks for bottles.
4 door racks, 2 of which are height adjustable.
1 full width drawer.
Internal water dispenser with fixed inlet water connection, integrated in left side wall.
Glare-free LED lighting (5600 K).
5 preset brightness settings for the lighting, also via Home Connect.
Interior stainless steel back wall.
Volume 335 litres.

Fresh cooling 0 °C
2 fresh cooling 0 °C drawers.
5 preset temperature settings between -2 °C and +4 °C combined with humidity setting for fish and meat, fruit, vegetables, beverages, standard.
Net volume 67 litres.

Freezing
No-frost technology with fast freezing.
Temperature adjustable from -16 °C to -24 °C.
4-star freezer compartment.
Freezing capacity 15 kg /24 h.
Storage time after a malfunction 18.5 h.
3 fully extendable drawers.
Volume 171 litres.

Ice maker
Integrated in the freezer compartment, with fixed inlet water connection.
Can be switched off.
Ice cube production approx. 1.5 kg/24 h.
Removable ice storage container with approx. 3 kg capacity.

Product rating
Energy efficiency class E at a range of energy efficiency classes from A to G.
Energy consumption 333.19 kWh/year. [1]
Noise level 39 dB (A) re 1 pW.

Planning notes
Door opening angle of 118°, fixable at 90°.
Wall recess of 25 mm necessary.
If the water pressure exceeds 0.8 MPa (8 bar), connect pressure relief valve between water tap and hose set.
[1] To achieve the declared energy consumption, the attached spacers have to be used. The spacers increase the appliance depth by about 2.5 cm. Without the spacers, the appliance is fully functional but consumes slightly more energy.

Connection
Connecting cable 2.4 m with plug.
Water inlet.
Supply hose 3.0 m with 3/4 " connection.
Water pressure 2 to 8 bar.

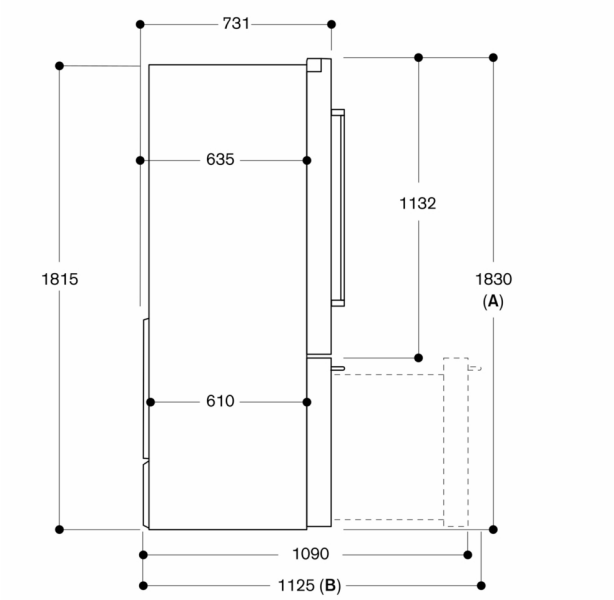

A: Front is adjustable from 1830 to 1847, with front levelling feet fully extended
B: With handle

measurements in mm

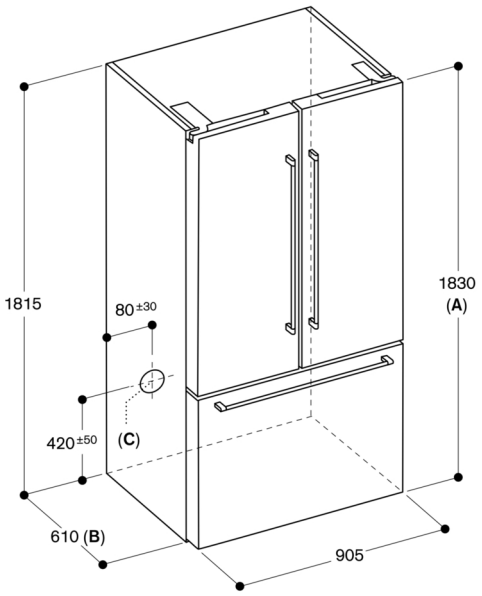

A: Front is adjustable from 1830 to 1847, with front levelling feet fully extended.
B: Add 25 mm for fixed spacers on back
C: Water connection position

measurements in mm

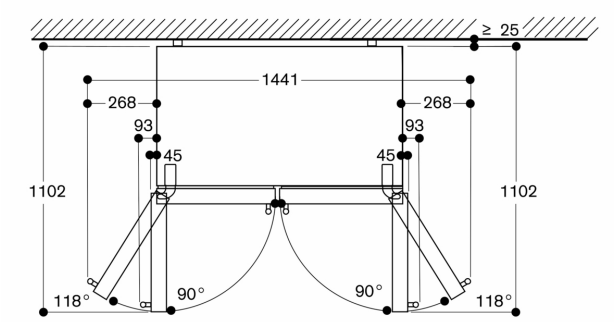

measurements in mm

Minimum Clearances

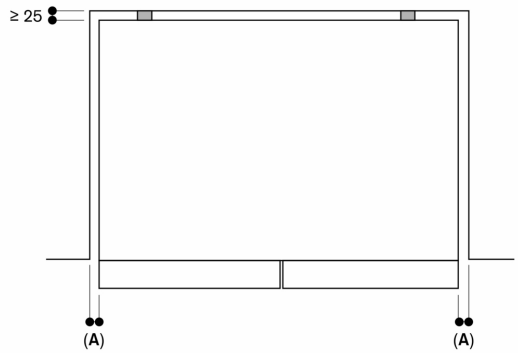

A: ≥ 3.2 mm

Leave a clearance of min. 12.7 mm above the appliance
Observe minimum clearances as seen above
Otherwise the energy consumption of the appliance is higher

Measurements in mm

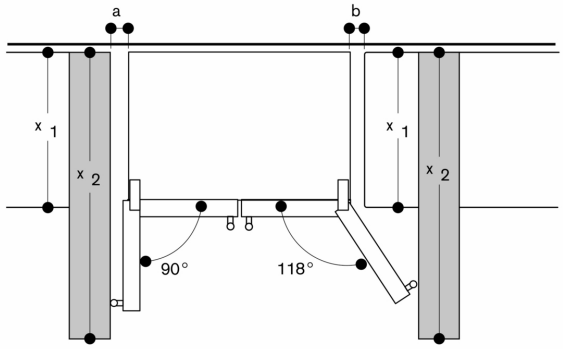

x 1 (unit depth)	a	b
600	0	0
650	0	33
700	45	60
x 2 (wall)	93	266

measurements in mm

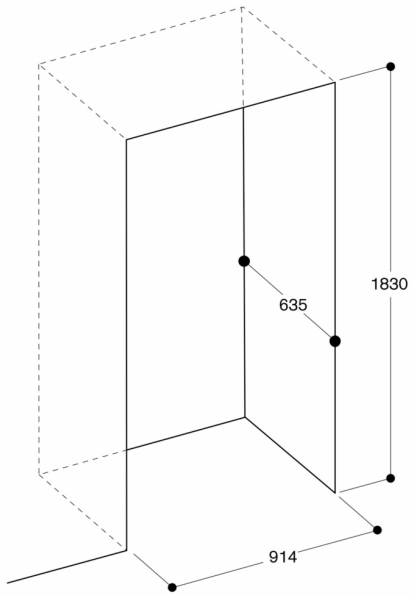

If you install the appliance in a niche, adhere to the dimensions shown

measurements in mm

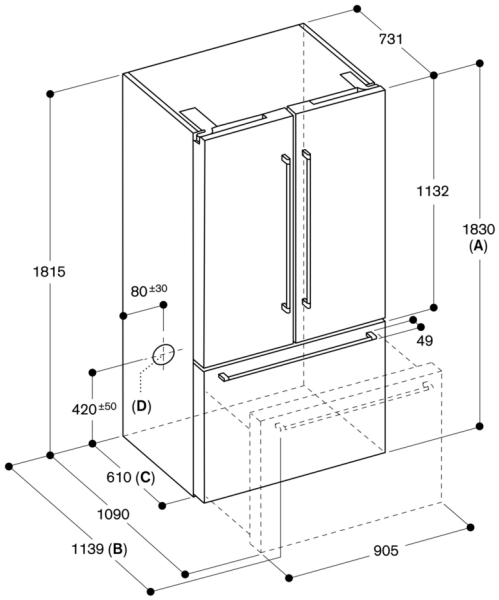

A: Front is adjustable from 1830 to 1847, with front levelling feet fully extended.
B: With handle
C: Add 25 mm for fixed spacers on back
D: Water connection position
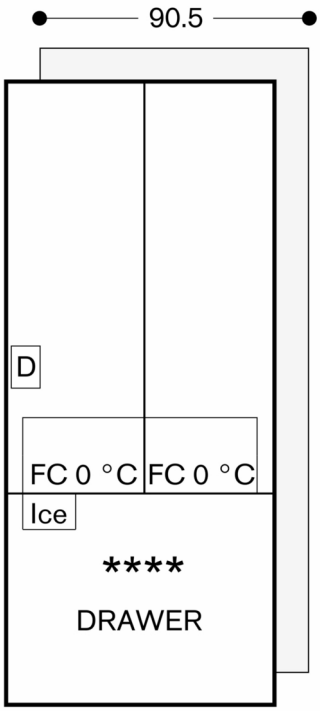
measurements in mm