VI462105

Optional accessories

CA050300:
Flex pan set, 3 pcs.

CA052300:
Griddle Plate

CA055300:
Flex pan large

installation accessories

CKI440000:
4 knobs, induction, black

CKI440010:
4 knobs, induction, stainless steel

VA420004:
Connecting strip Serie 400, flush, short

Flex induction cooktop 400 series
60 cm
VI462105

- Solid stainless steel knob, also in black robust finishing, for precise control and personalisation
- Flex function for combining the rectangular cooking areas
- Flexible positioning of cookware
- Flush-Top Frame installation: seamless transition of hob and worktop makes cleaning easier and integrates the hob beautifullyFlex function for combining the rectangular cooking areas

Flexible positioning of cookware inside combined cooking areas with automatic extension up to 30 cm

Solid stainless steel knob, also selectable with black robust finishing, for precise control and personalisation

Frameless for flush installation

Can be combined perfectly with other Vario appliances of the 400 series

Cooking zones

2 flex induction cooking areas 23x20 cm (2200 W, with booster 3700 W), linked together 23x40 cm (3300 W, with booster 3700 W), with automatic extension up to 30x30 cm (3300 W, with booster 3700 W).

2 flex induction cooking areas 23x20 cm (2200 W, with booster 3700 W), linked together 23x40 cm (3300 W, with booster 3700 W).

Handling

Control knobs with illuminated ring, cooking zone and output level markings.

Electronic power control in 12 stage (1...12).

User friendly control with two color display (white / orange).

Features

Flex function for rectangular cooking areas.

Frying sensor function.

Booster function.

Stopwatch.

Short-term timer.

Options menu.

Power management.

Selected digital services (Gaggenau Home Connect)

Cooktop-based ventilation control (with suitable hood).

Remote monitoring.

Remote diagnostics.

Integrated WiFi module for digital services (Home Connect).

The availability of the Home Connect functionality depends on the availability of the Home Connect Services in your country. Home Connect Services are not available in every country – for further information please check: www.home-connect.com

Safety

Operation indicator.

Pot detection.

2 stage Hh residual heat indicator for each zone

Safety shut-off.

Planning notes

The horizontal positioning of the knobs may be aligned with the specific cooking areas.

The drawing "Installation of the control knob" must be observed if the panel is more than 23 mm thick (there must be a recess at the rear).

The bearing capacity and stability, in the case of thin worktops in particular, must be supported using suitable substructures. Take into account the appliance weight and additional loads.

Installation is possible in worktops made of stone, synthetics or solid wood. Heat resistance and watertight sealing of the cut edges must be observed. Concerning other materials please consult the worktop manufacturer.

The groove must be continuous and even, so that uniform placing of the appliance on the gasket is ensured. Do not use discontinuous lining.

The joint width may vary due to size tolerances of the combinations and of the worktop cut-out.

If installing several appliances in individual cut-outs allow for a division bar of minimum 50 mm between the individual cut-outs.

Operates with magnetic (induction) iron pots and pans only. For an optimal heat distribution, the use of sandwich bottom cookware is recommended.

Special accessories (order as spare parts):

Part No. 17006018 Frying sensor pan, ø 20 cm

Part No. 17006184 Frying sensor pan, ø 24 cm

Part No. 17006185 Frying sensor pan, ø 28 cm

The wok pan WP 400 001 cannot be used with this appliance.

Appliance can be snapped into the worktop from above.

Appliance weight: approx. 16.

Connection

Total connected load 7.4 KW.

Connecting cable 1.10 m without plug.

Power consumption standby/display off 0.5 W.

Power consumption standby/network 1.7 W.

Please check the user manual for how to switch off the WiFi module.

View from above

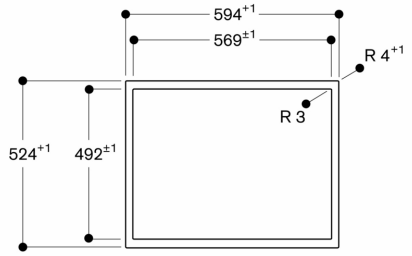

measurements in mm

Installation of the control knob; flush installation

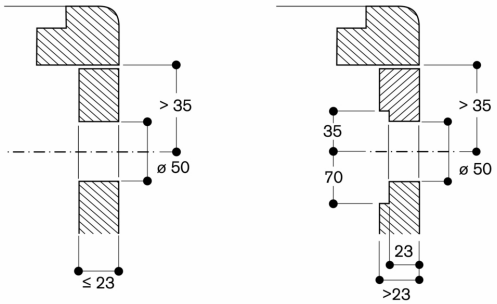

measurements in mm

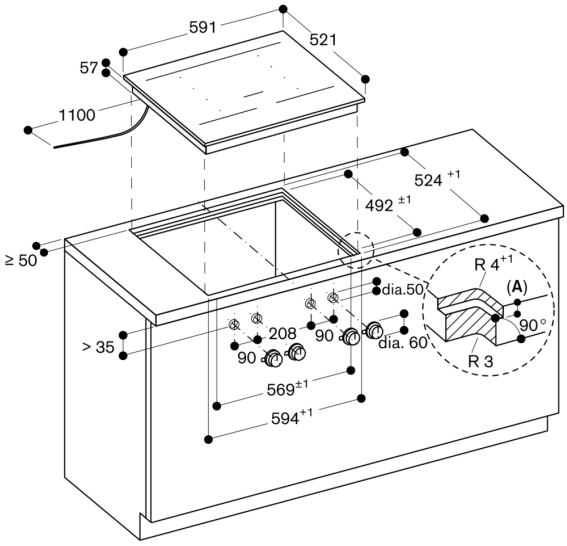

A: $6.5^{+0.5}$

measurements in mm

Longitudinal section

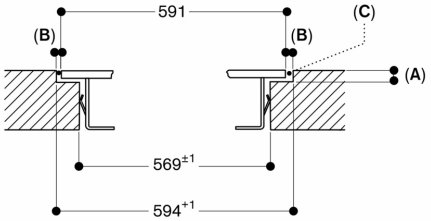

A: $6.5^{+0.5}$
B: 1.5
C: Fill with silicone

measurements in mm

Cross-section

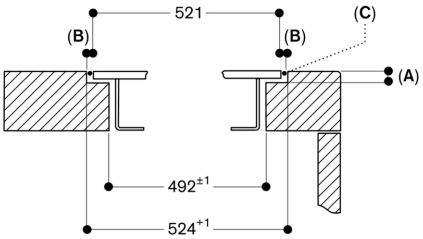

A: $6.5^{+0.5}$
B: 1.5
C: Fill with silicone

measurements in mm